REV.	DESCRIPTION	DATE	APPROVED
NC	INITIAL RELEASE		

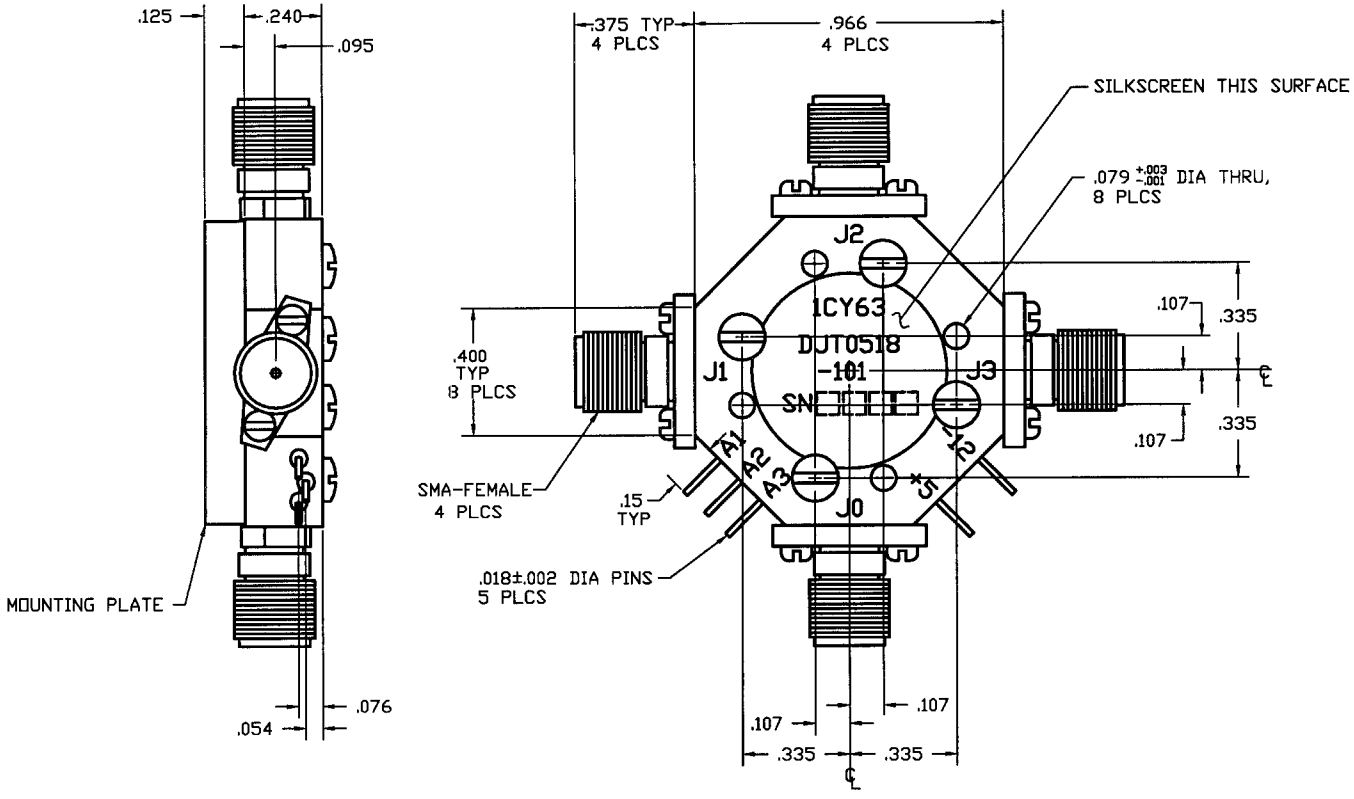

SPECIFICATIONS:

FREQUENCY:	0.5 - 18.0 GHz	
INSERTION LOSS:	0.5 - 4.0 GHz	1.5 dB MAX
	4.0 - 8.0 GHz	2.2 dB MAX
	8.0 - 12.0 GHz	2.5 dB MAX
	12.0 - 18.0 GHz	3.0 dB MAX
VSWR(50 OHM): ("ON" OR "OFF")	0.5 - 12.0 GHz	2.0:1 MAX
	12.0 - 18.0 GHz	2.2:1 MAX
ISOLATION:	0.5 - 12.0 GHz	60 dB MIN
	12.0 - 18.0 GHz	55 dB MIN
SWITCHING SPEED:	100 nSEC MAX	

CONTROL:

TTL LOW - INSERTION LOSS
TTL HIGH - ISOLATION

OPERATING TEMP. RANGE: -54° TO +100° C

STORAGE TEMP. RANGE: -54° TO +100° C

	DJT0520-101
NEXT ASSY	USED ON
APPLICATION	

FRACTIONS DECIMALS ANGLES
± .XX± .02 ±
.XXX± .010

MATERIAL

FINISH

APPROVALS	DATE
DRAWN	
CHECKED	
ISSUED	

SIERRA MICROWAVE TECHNOLOGY

OUTLINE

SIZE	FSCM NO.	DWG. NO.	REV.
B	1CY63	605-0197-001	

SCALE