REV.	DESCRIPTION	DATE	APPROVED
NC	INITIAL RELEASE		

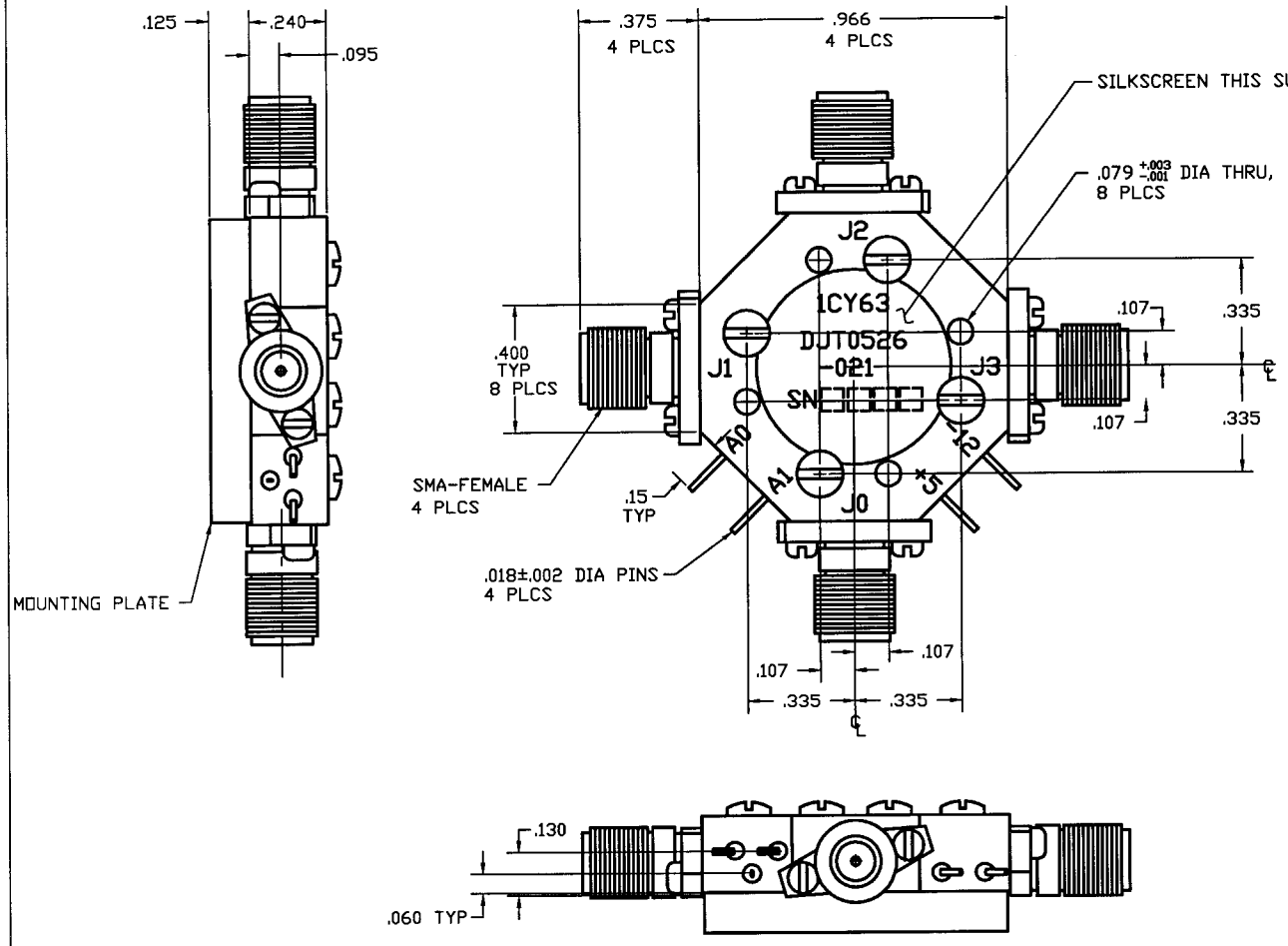

SPECIFICATIONS:

FREQUENCY:	0.5 - 26.5 GHz
INSERTION LOSS:	
0.5-12.0 GHz	2.0 dB MAX
12.0-18.0 GHZ	2.5 dB MAX
18.0-26.5	4.5 dB MAX
VSWR(50 OHM):	2.3:1 MAX
ISOLATION:	
0.5-26.5 GHz	60 dB MIN
SWITCHING SPEED:	75nSEC

TTL LOGIC TABLE:

INS. LOSS	A0	A1
J1	0	0
J2	1	0
J3	0	1

OPERATING TEMP. RANGE:	-54° TO +100° C
STORAGE TEMP. RANGE:	-54° TO +100° C

603-0040-001	DJT0526-021
NEXT ASSY	USED ON
APPLICATION	

FRACTIONS DECIMALS ANGLES
± .XX± .02 ±
.XXX± .010

MATERIAL

FINISH

APPROVALS	DATE
DRAWN	
CHECKED	
ISSUED	

SIERRA MICROWAVE TECHNOLOGY

OUTLINE FOR DJT0526-021

SIZE	FSCM NO.	DWG. NO.	REV.
B	1CY63	605-0261-001	

SCALE