COMPUTER GENERATED DRAWING
MANUAL CHANGES NOT AUTHORIZED

REVISIONS			
REV.	DESCRIPTION	DATE	RELEASED BY
NC	INITIAL RELEASE	10-17-96	B.M.
A	REV PER ECN: 7910		

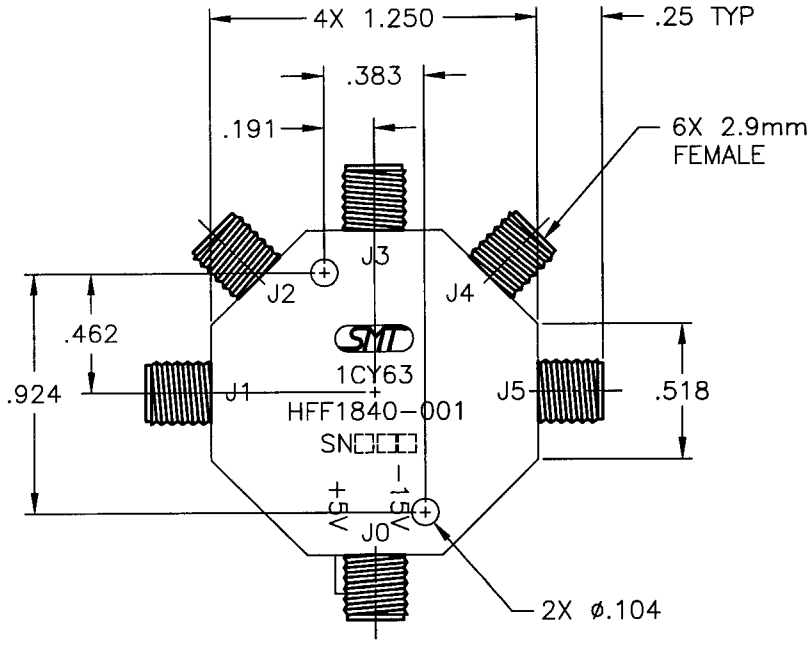

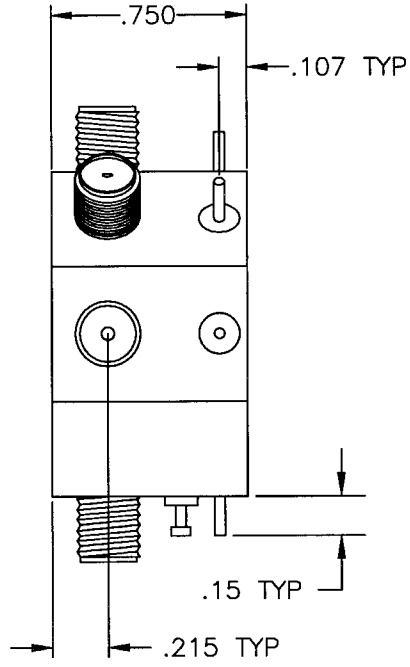

SPECIFICATIONS:

FREQUENCY RANGE:	18.0 – 40.0 GHz
INSERTION LOSS:	6.7 dB MAX
ISOLATION:	50 dB MIN
VSWR (ON):	2.5:1 MAX
SWITCHING SPEED: (50% TTL TO 10/90% RF)	300 NSEC MAX
DC POWER:	+5V @ 90 mA MAX −15V @ −75 mA MAX
TEMPERATURE:	
OPERATING	−55 TO +85 °C
STORAGE	−65 TO +125 °C
CONTROL:	TTL LOW – INSERTION LOSS TTL HIGH – ISOLATION

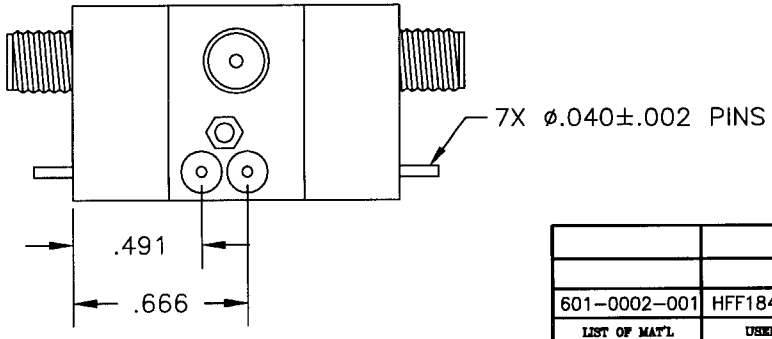

ITEM	QTY REQ'D	FSCM NO.	PART OR IDENTIFICATION NO.	NOMENCLATURE OR DESCRIPTION	MATERIAL SPECIFICATION

PARTS LIST

601-0002-001	HFF1840-001
LIST OF MAT'L	USED ON

APPLICATION

UNLESS OTHERWISE SPECIFIED DIMENSIONS ARE IN INCHES TOLERANCES ARE:
FRACTIONS ± DECIMALS .XX±.01 .XXX±.020 ANGLES ±

MATERIAL:

FINISH:

DO NOT SCALE DRAWING

CONTRACT NO.

APPROVALS		DATE
DRAWN:	D.STALEY	10-17-96
CHECKED:		
DESIGN ENG.	B.M.	10-17-96
MAT. & PROCESSES		
Q.A.		

SIERRA MICROWAVE TECHNOLOGY

TITLE: OUTLINE FOR HFF1840-001

SIZE	FSCM NO.	DWG NO.	REV
B	1CY63	605-0369-001	A

BRDR SCALE | SHEET OF