REVISIONS			
REV.	DESCRIPTION	DATE	APPROVED
NC	INITIAL RELEASE		

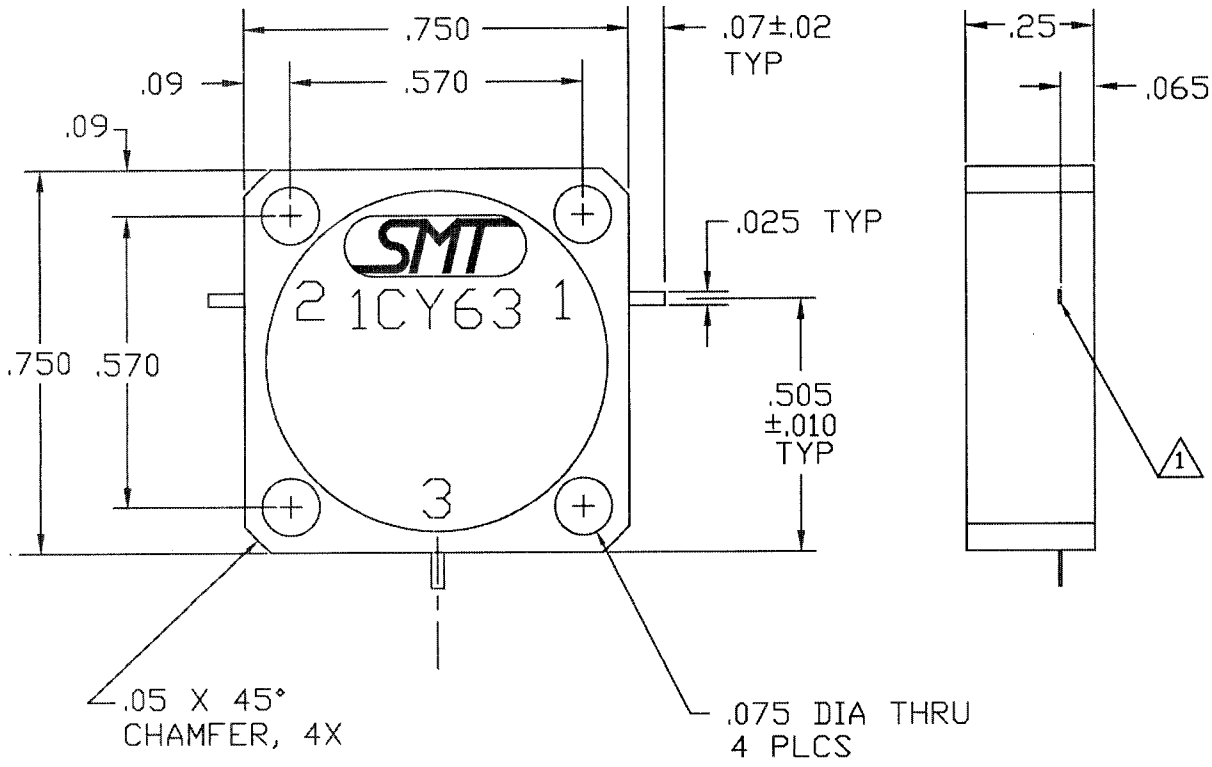

SPECIFICATIONS

1. FREQUENCY RANGE_____1.400-1.600 GHz
2. VSWR_____1.25:1 MAX
3. INSERTION LOSS_____ 0.5 dB MAX
4. TEMPERATURE
   - OPERATING_____ -54° TO +85°C
   - STORAGE_____-54° TO +85°C
5. LOAD RATING_____ 4 WATTS MIN. @85°C HEATSINK TEMPERATURE

2. CASE: STAINLESS STEEL NICKEL PLATED.

1. TABS ARE .005±.001 THK. Be Cu, GOLD PLATED.

NOTES:

QTY REQD	FSCM NO.	PART OR IDENTIFING NO.	NOMENCLATURE OR DESCRIPTION	MATERIAL SPECIFICATION

PARTS LIST

203-0094-001	SDC1416A
NEXT ASSY	USED ON
APPLICATION	

FRACTIONS DECIMALS ANGLES
± .XX± .01 ±
.XXX± .005

MATERIAL

FINISH

APPROVALS	DATE
DRAWN SCHIRMER	
CHECKED	
ISSUED	

SIERRA MICROWAVE TECHNOLOGY

OUTLINE FOR SDC1416A

SIZE	FSCM NO.	DWG. NO.	REV.
B	1CY63	205-1425-001	

SCALE SHEET