REVISIONS			
REV.	DESCRIPTION	DATE	APPROVED
NC	INITIAL RELEASE		

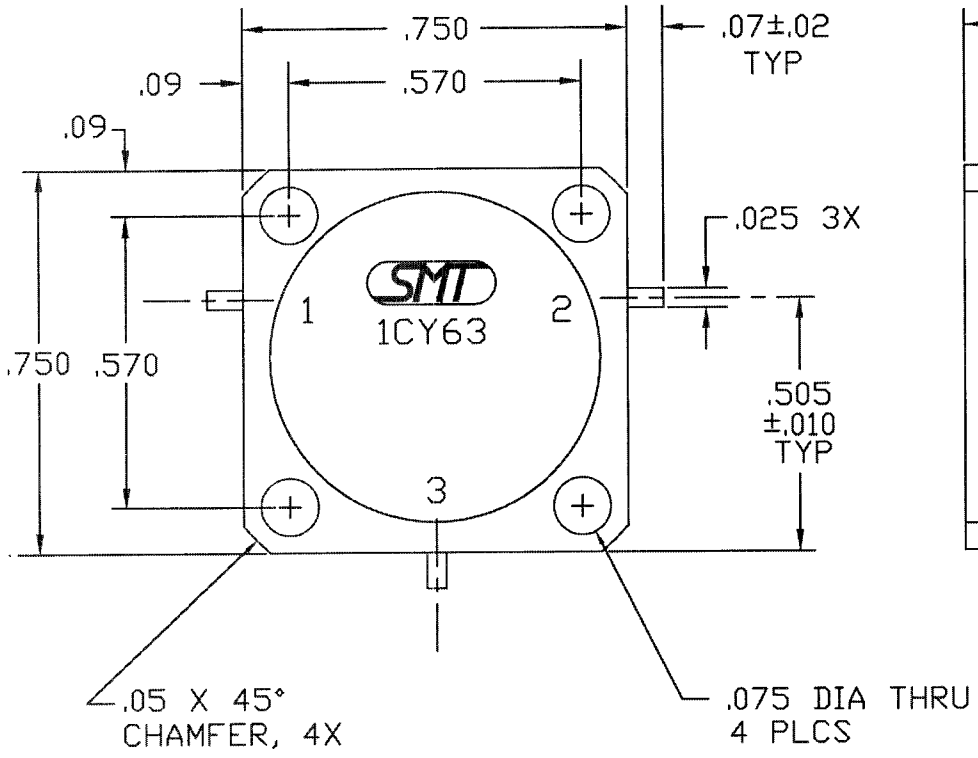

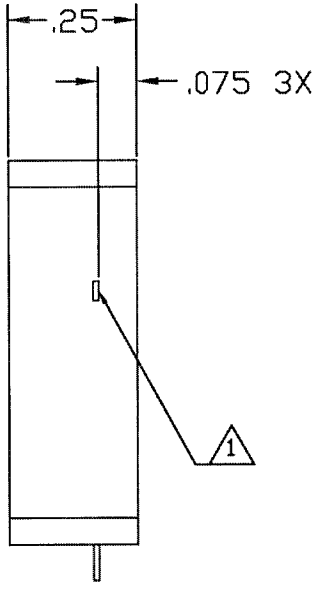

SPECIFICATIONS

1. FREQUENCY RANGE 2.0 TO 2.5 GHz
2. VSWR 1.30:1 MAX
3. INSERTION LOSS 0.5 dB MAX
4. TEMPERATURE RANGE
   - OPERATING −20° TO +65°C
   - STORAGE −54° TO +100°C

2. CASE: STAINLESS STEEL NICKEL PLATED.

1. TABS ARE .005±.001 THK. Be Cu, GOLD PLATED.

NOTES:

QTY REQD	FSCM NO.	PART OR IDENTIFING NO.	NOMENCLATURE OR DESCRIPTION	MATERIAL SPECIFICATION

PARTS LIST

203-0128-001	SDC2025B
NEXT ASSY	USED ON
APPLICATION	

FRACTIONS ± DECIMALS .XX± .01 .XXX± .005 ANGLES ±

MATERIAL

FINISH

APPROVALS	DATE
DRAWN	
CHECKED	
ISSUED	

SIERRA MICROWAVE TECHNOLOGY

OUTLINE FOR SDC2025B

SIZE	FSCM NO.	DWG. NO.	REV.
B	1CY63	205-2174-001	

SCALE SHEET