COMPUTER GENERATED DRAWING
MANUAL CHANGES NOT AUTHORIZED

REVISIONS			
REV.	DESCRIPTION	DATE	RELEASED BY
NC	INITIAL RELEASE		

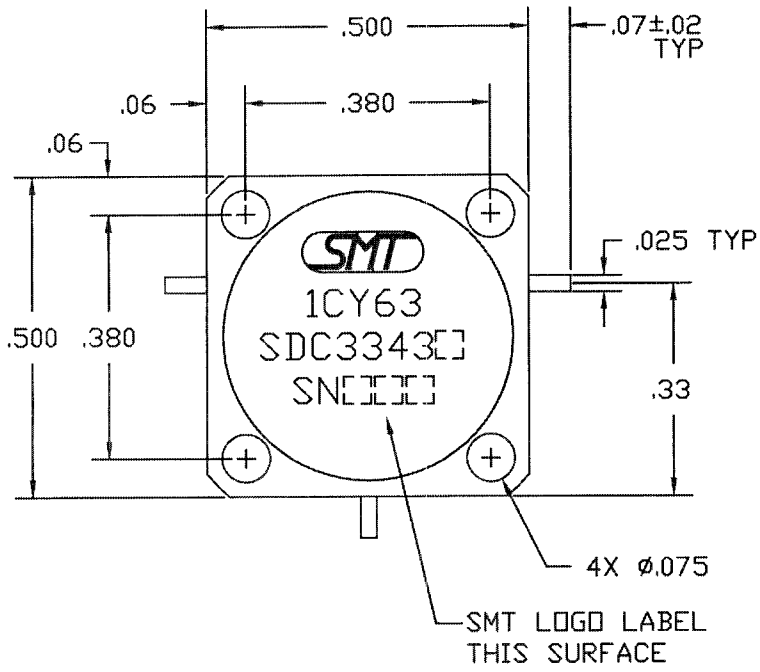

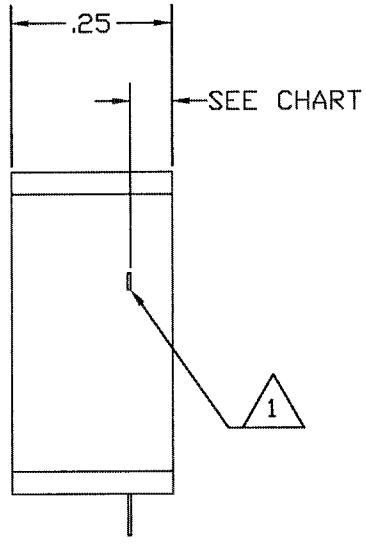

SPECIFICATIONS

1. FREQUENCY RANGE: 3.3 TO 4.3 GHz
2. VSWR: 1.30:1 MAX
3. INSERTION LOSS: 0.5 dB MAX
4. TEMPERATURE:
   - OPERATING: -54° TO +100°C
   - STORAGE: -54° TO +100°C

TAB HEIGHT CHART	
OPTION NO.	HEIGHT (NOM.)
A	.065
B	.075
C	.090
D	.100
E	.120

3. CIRCULATION IS CLOCKWISE.
2. CASE: STAINLESS STEEL NICKEL PLATED.
1. TABS ARE .005±.001 THK. Be Cu, GOLD PLATED.

NOTES:

ITEM	QTY REQ'D	FSCM NO.	PART OR IDENTIFICATION NO.	NOMENCLATURE OR DESCRIPTION	MATERIAL SPECIFICATION

PARTS LIST

LIST OF MAT'L	USED ON
203-0158-001	SDC3343X

APPLICATION

UNLESS OTHERWISE SPECIFIED DIMENSIONS ARE IN INCHES
TOLERANCES ARE:
FRACTIONS ± DECIMALS .XX± .01 .XXX± .005 ANGLES ±

MATERIAL:

FINISH:

DO NOT SCALE DRAWING

CONTRACT NO.

APPROVALS		DATE
DRAWN:	D.STALEY	1-23-02
CHECKED:		
DESIGN ENG.		
MAT. & PROCESSES		
Q.A.		

SIERRA MICROWAVE TECHNOLOGY

TITLE: OUTLINE FOR SDC3343X

SIZE	FSCM NO.	DWG NO.	REV
B	1CY63	205-3445-001	NC

BRDR SCALE | SHEET OF